IDP INTERNATIONAL DOOR PRODUCTS, INC.

21300 W 8 Mile Rd.
Southfield, MI 48075-5638

ENTRY-FIT™ "K2A-Series" ADJUSTABLE STEEL DOOR FRAME Utilizing a Steel Door Panel

"IMPACT"

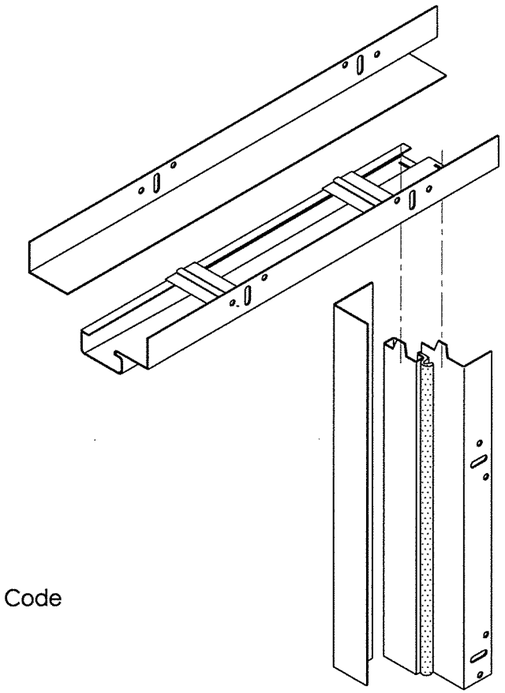

ADJUSTABLE STEEL DOOR FRAME
K2A-Series

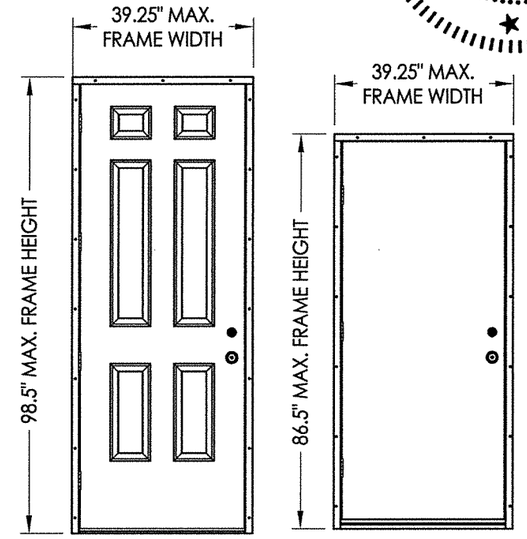

INSWING OR OUTSWING

GENERAL NOTES

1. This product has been evaluated and is in compliance with the 6th Edition (2017) Florida Building Code (FBC) structural requirements including the "High Velocity Hurricane Zone" (HVHZ).
2. Product anchors shall be as listed and spaced as shown on details. Anchor embedment to base material shall be beyond wall dressing or stucco.
3. When used in the "HVHZ" this product complies with Section 1626 of the Florida Building Code and does not require an impact resistant covering.
4. When used in areas outside of the "HVHZ" requiring wind borne debris protection, this product complies with FBC Sections 1609.1.2 & R301.2.1.2 and does not require an impact resistant covering. This product meets missile level "D" and includes Wind Zone 4 as defined in ASTM E 1996 and FBC Sections 1609.1.2.2 & R301.2.1.2.1.
5. This product has been tested with the door panels as specified in this approval. Substitution of a similar product may be approved for use by the local Authority Having Jurisdiction. In all cases, the steel door used must possess a comparable current Florida Statewide product approval. The door panel size and design pressure (DP) rating shall not exceed the sizes and DP ratings shown in this approval or the steel side hinged swing door approval being used.
6. Site conditions that deviate from the details of this drawing require further engineering analysis by a licensed engineer or registered architect.
7. Configurations utilizing the high-dam outswing bump threshold (item #30) meet water infiltration requirements for the "HVHZ".
8. Configurations utilizing inswing threshold (item #31), outswing threshold (item #32) and the ADA threshold (item #33), do not meet the water infiltration requirements for the "HVHZ". These units shall be installed only in non-habitable areas or at habitable locations protected by an overhang or canopy such that the angle between the edge of canopy or overhang to sill is less than 45 degrees.
9. When used in the "HVHZ", steel must be protected as specified in FBC Section 2222.6.

DOOR PANEL	MAX. OVERALL FRAME DIMENSION	DESIGN PRESSURE (PSF) INSWING		DESIGN PRESSURE (PSF) OUTSWING	
		POSITIVE	NEGATIVE	POSITIVE	NEGATIVE
JELD-WEN	39.25" X 86.5"	+ 75.0	- 75.0	+ 65.0	- 75.0
JELD-WEN	39.25" X 98.5"	+ 60.0	- 70.0	+ 60.0	- 60.0

TABLE OF CONTENTS

SHEET#	DESCRIPTION
1	Typical elevations, design pressures & general notes
2	Door panel details
3	Door panel details
4	Corner detail
5	Elevations
6	Horizontal cross sections
7	Vertical cross sections
8	Frame & buck anchoring (7'-0" door)
9	Frame & buck anchoring (8'-0" door)
10	Bill of materials and components

STATE OF FLORIDA PROFESSIONAL ENGINEER LYNDON F. SCHMIDT LICENSE No. 43409

4/17/18

Documents Prepared By:
Lyndon F. Schmidt
P.E. No. 43409

RW BUILDING CONSULTANTS, INC.
P.O. Box 230, Valrico, FL 33595
Phone No.: 813.659.9197
FBPE C.A. No. 9813

PRODUCT: IDP STEEL FRAME (K2A-SERIES)

PART OR ASSEMBLY: TYPICAL ELEVATION, DESIGN PRESSURE & GENERAL NOTES

NO.	DATE	REVISIONS	BY
2	4/17/18	CLARIFY FRAME ANCHORING	LFS
1	9/26/17	UPDATE TO 6TH ED. (2017) FBC	JK

DATE: 10/23/15
SCALE: N.T.S.
DWG. BY: JK
CHK. BY: LFS
DRAWING NO.: FL-14512.4
SHEET 1 OF 10

© 2015 R.W. BUILDING CONSULTANTS INC.

R:\Clients\IDP PERMANENT\A - Florida Product Approvals\FL-14512\C - Drawings\FL 14512 (2017)\FL-14512.4.dwg, FL-14512.4

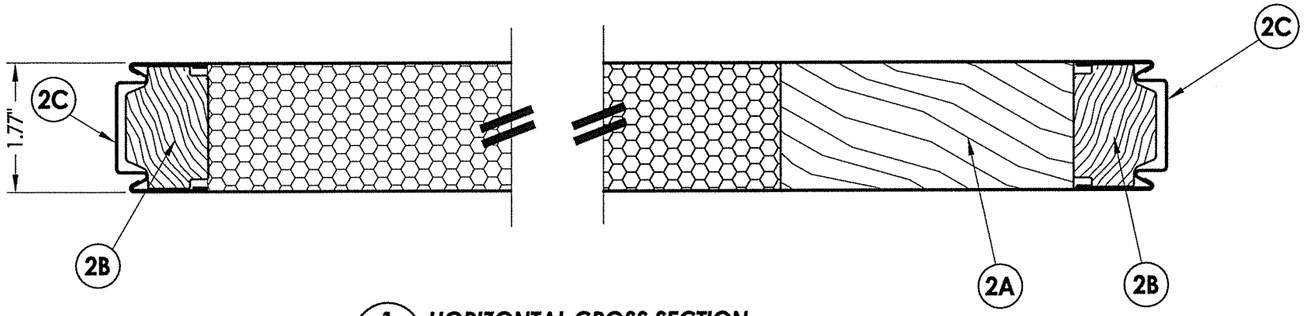

1/2 **HORIZONTAL CROSS SECTION**

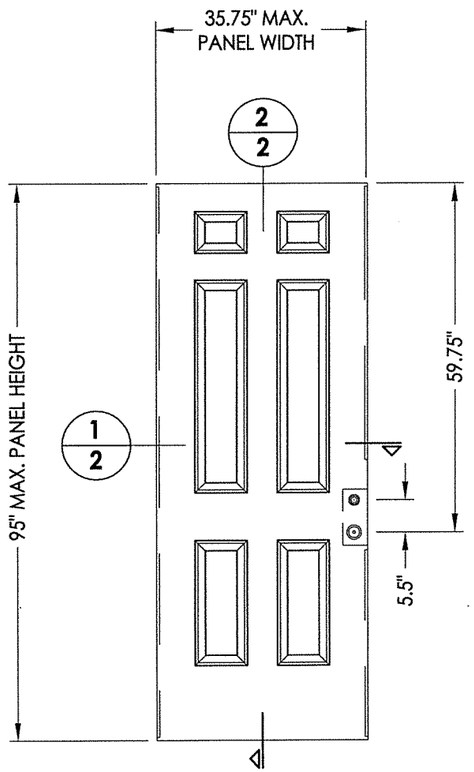

40 **8' - DOOR PANEL**
Steel (JELD-WEN)

STEEL DOOR SKIN: MIN. 0.022" THK.
GALVANIZED STEEL (Fy = 48,000 PSI MIN.)

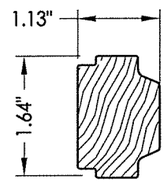

2B **STILE REINFORCEMENT**
Wood

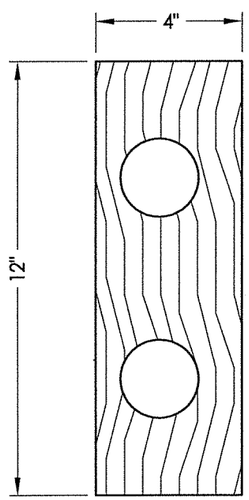

2A **LOCK BLOCK**
Wood

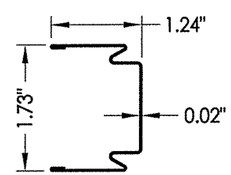

2C **LATCH / HINGE STILE**
Steel

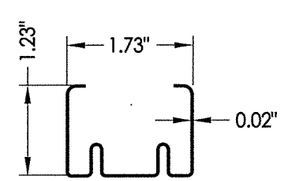

2D **BOTTOM RAIL**
Steel

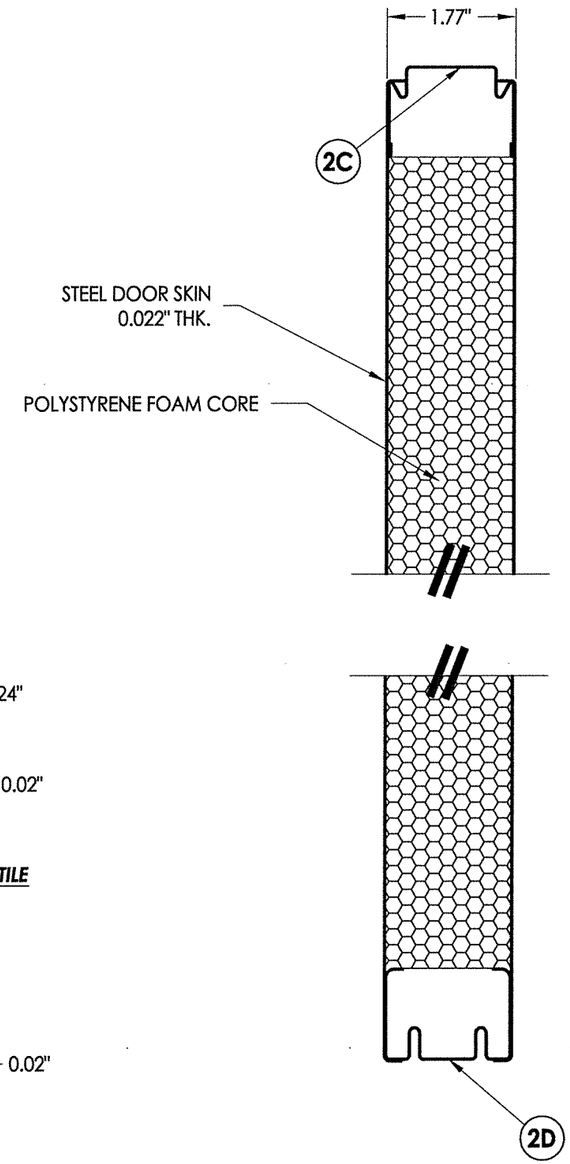

2/2 **VERTICAL CROSS SECTION**

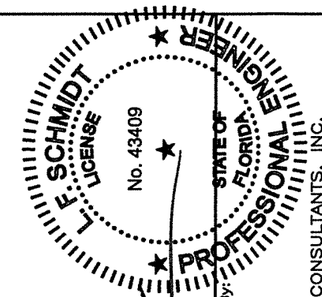

4-17-18

Documents Prepared By:
Lyndon F. Schmidt
P.E. No. 43409

BUILDING CONSULTANTS, INC.
P.O. Box 230, Valrico, FL 33595
Phone No.: 813.659.9197
FBPE C.A. No. 9813

PRODUCT: STEEL FRAME IDP (K2A-SERIES)

PART OR ASSEMBLY: DOOR PANEL DETAILS

NO.	DATE	BY
2	4/17/18	LFS
1	9/26/17	JK

REVISIONS: CLARIFY FRAME ANCHORING; UPDATE TO 6TH ED. (2017) FBC

DATE: 10/23/15
SCALE: N.T.S.
DWG. BY: JK
CHK. BY: LFS
DRAWING NO.: FL-14512.4
SHEET 2 OF 10

© 2015 R.W. BUILDING CONSULTANTS INC.

R:\Clients\IDP PERMANENT\A - Florida Product Approvals\FL-14512\C - Drawings\FL 14512 (2017)\FL-14512.4.dwg, 2.1

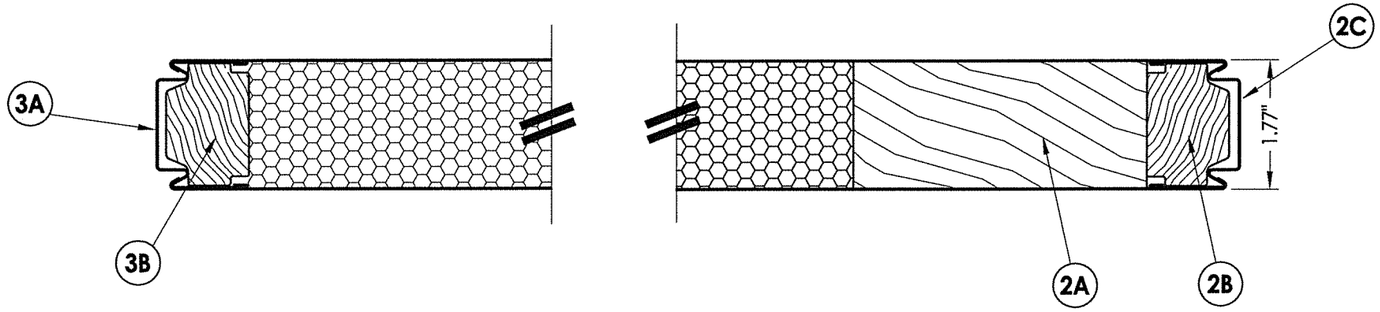

1/3 **HORIZONTAL CROSS SECTION**

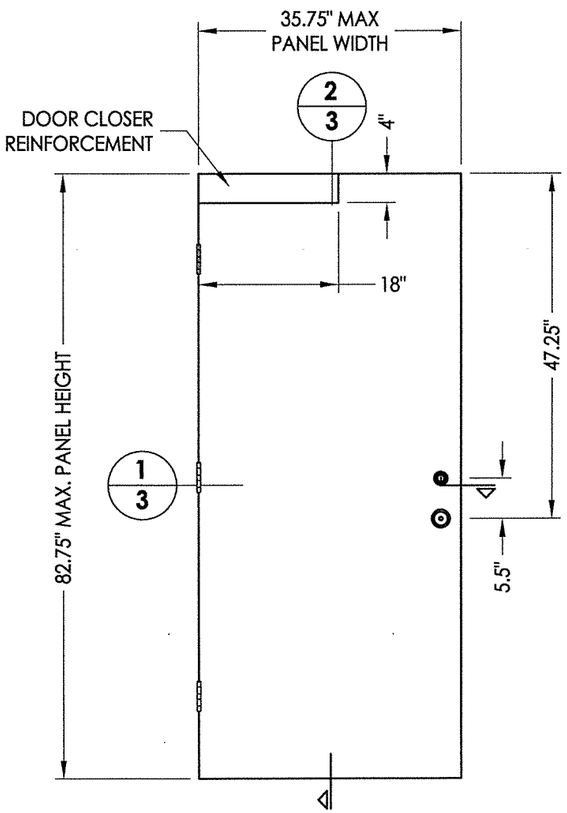

50 **7' - DOOR PANEL**
Steel (JELD-WEN)

STEEL DOOR SKIN: MIN. 0.022" THK.
GALVANIZED STEEL (Fy = 48,000 PSI MIN.)

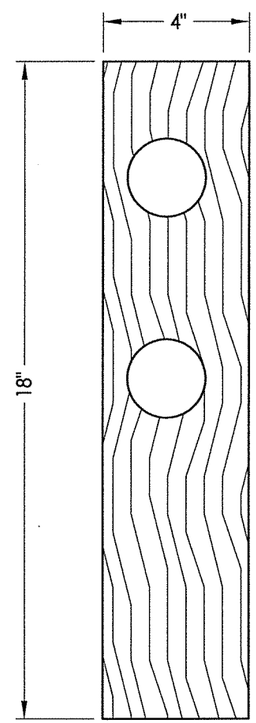

3A **LOCK BLOCK**
Wood

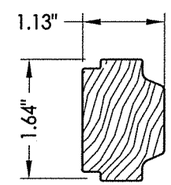

3B **STILE REINFORCEMENT**
Wood

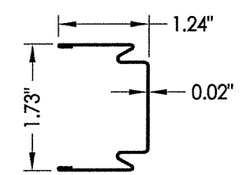

3C **LATCH / HINGE STILE**
Steel

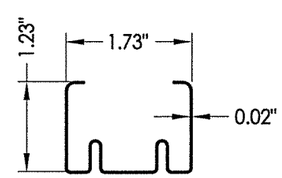

3D **BOTTOM RAIL**
Steel

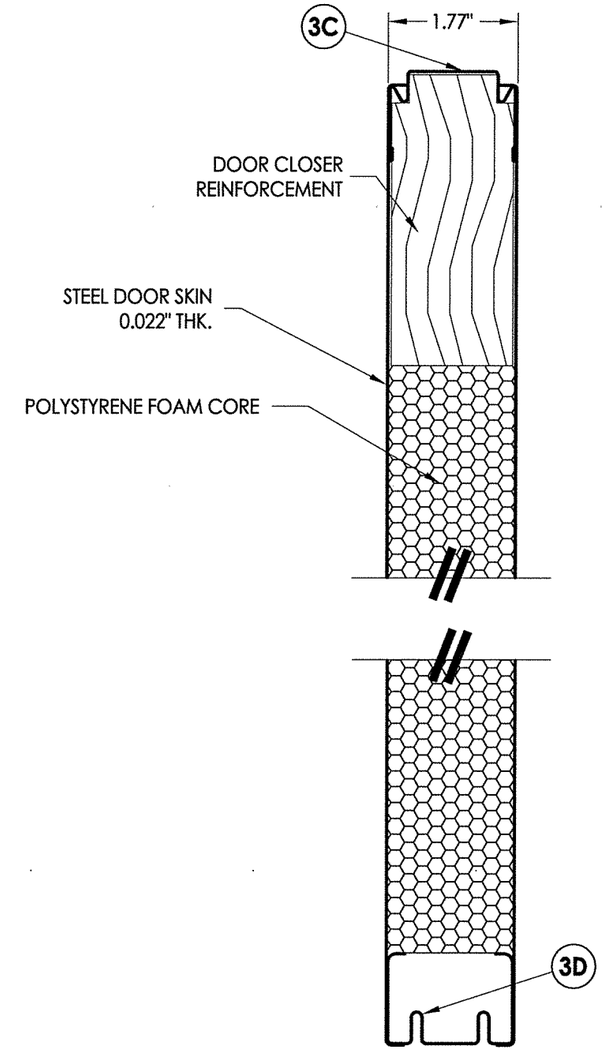

2/3 **VERTICAL CROSS SECTION**

L. F. SCHMIDT
LICENSE
No. 43409
STATE OF FLORIDA
PROFESSIONAL ENGINEER
4-17-18

Documents Prepared By:
Lyndon F. Schmidt
P.E. No. 43409

BUILDING CONSULTANTS, INC.
P.O. Box 230, Valrico, FL 33595
Phone No.: 813.659.9197
FBPE C.A. No. 9813

PRODUCT: IDP STEEL FRAME (K2A-SERIES)

PART OR ASSEMBLY: DOOR PANEL DETAILS

REVISIONS

NO.	DATE		BY
2	4/17/18	CLARIFY FRAME ANCHORING	LFS
1	9/26/17	UPDATE TO 6TH ED. (2017) FBC	JK

DATE: 10/23/15
SCALE: N.T.S.
DWG. BY: JK
CHK. BY: LFS
DRAWING NO.: FL-14512.4
SHEET 3 OF 10

© 2015 R.W. BUILDING CONSULTANTS INC.

R:\Clients\IDP PERMANENT\A - Florida Product Approvals\FL-14512\C - Drawings\FL 14512 (2017)\FL-14512.4.dwg, 3.1

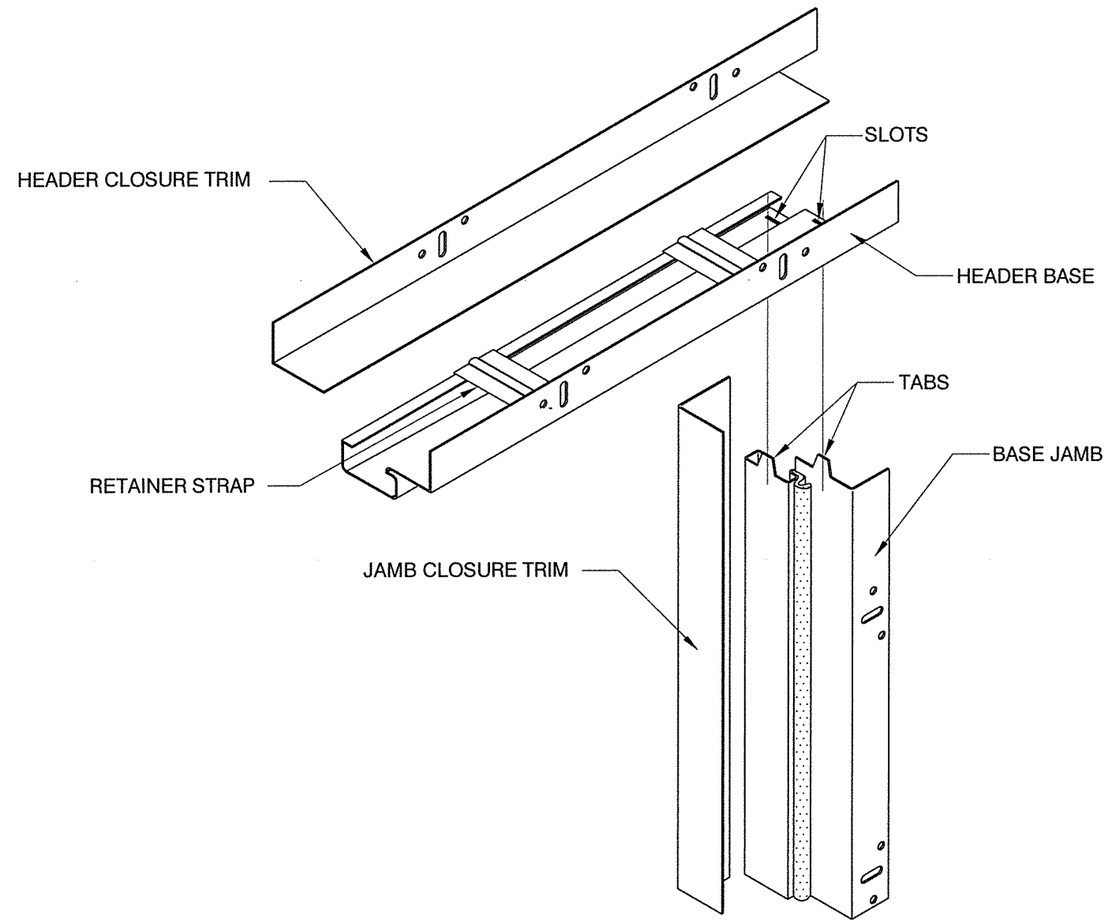

CORNER DETAIL
IDP ENTRY-FIT™ ADJUSTABLE
STEEL DOOR FRAME (K2A-SERIES)

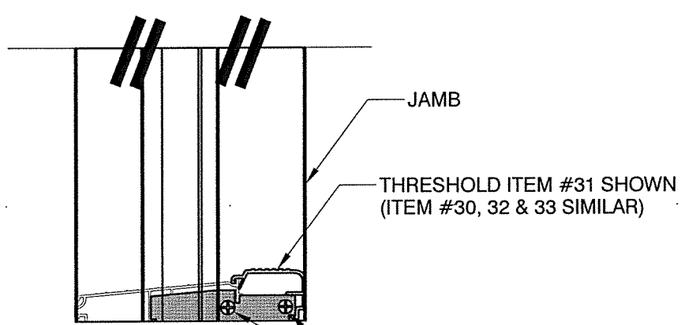

CORNER DETAIL
K2A-SERIES FRAME @ SILL

LYNDON F. SCHMIDT
LICENSE
No. 43409
STATE OF FLORIDA
PROFESSIONAL ENGINEER

Documents Prepared By:
Lyndon F. Schmidt
P.E. No. 43409

RW BUILDING CONSULTANTS, INC.
P.O. Box 230, Valrico, FL 33595
Phone No.: 813.659.9197
FBPE C.A. No. 9813

PRODUCT: *STEEL FRAME (K2A-SERIES)* *IDP*

PART OR ASSEMBLY: *CORNER DETAIL*

REVISIONS

NO.	DATE	BY
2	4/17/18	LFS
1	9/26/17	JK

CLARIFY FRAME ANCHORING
UPDATE TO 6TH ED. (2017) FBC

DATE: *10/23/15*
SCALE: *N.T.S.*
DWG. BY: *JK*
CHK. BY: *LFS*
DRAWING NO.: *FL-14512.4*
SHEET *4* OF *10*

© 2015 R.W. BUILDING CONSULTANTS INC.

R:\Clients\IDP PERMANENT\A - Florida Product Approvals\FL-14512\C - Drawings\FL 14512 (2017)\FL-14512.4.dwg, 4.1

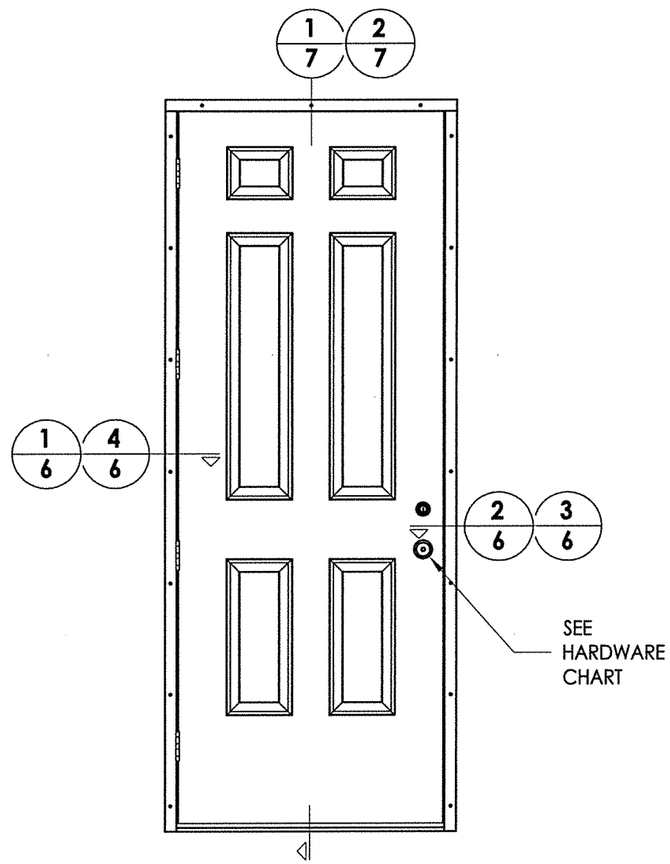

8' DOOR

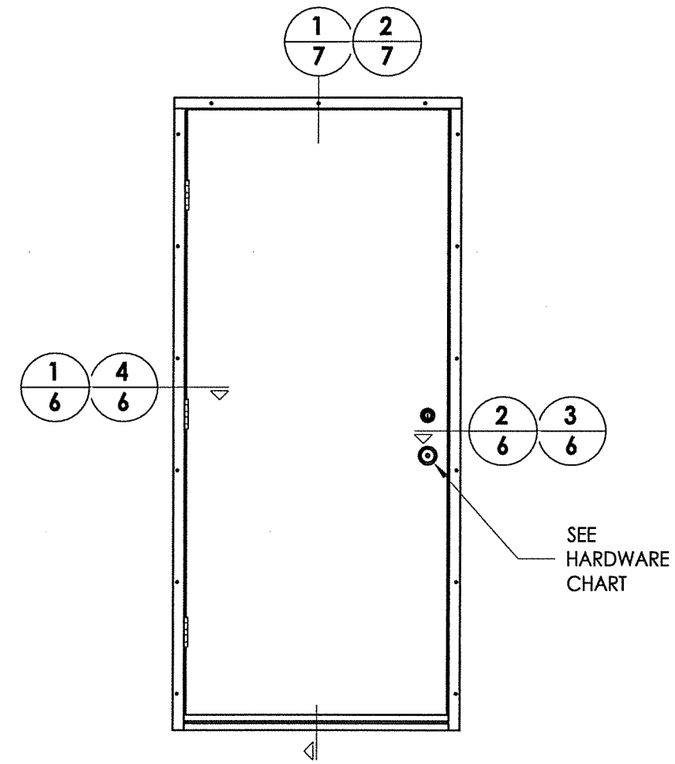

7' DOOR

HARDWARE CHART		
MANUFACTURER	MODEL	
KWIKSET	LOCK:	SIGNATURE SERIES
	DEADBOLT:	SIGNATURE SERIES (980)
SCHLAGE	LEVER:	"F" SERIES (F51)
	DEADBOLT:	"B" SERIES (B300)

L. F. SCHMIDT
LICENSE
No. 43409
STATE OF FLORIDA
PROFESSIONAL ENGINEER

4-17-18

Documents Prepared By:
Lyndon F. Schmidt
P.E. No. 43409

R.W. BUILDING CONSULTANTS, INC.
P.O. Box 230, Valrico, FL 33595
Phone No.: 813.659.9197
FBPE C.A. No. 9813

PRODUCT: IDP STEEL FRAME (K2A-SERIES)

PART OR ASSEMBLY: ELEVATIONS

NO.	DATE	REVISIONS	BY
2	4/17/18	CLARIFY FRAME ANCHORING	LFS
1	9/26/17	UPDATE TO 6TH ED. (2017) FBC	JK

DATE: 10/23/15
SCALE: N.T.S.
DWG. BY: JK
CHK. BY: LFS
DRAWING NO.: FL-14512.4
SHEET 5 OF 10

© 2015 R.W. BUILDING CONSULTANTS INC.

R:\Clients\IDP PERMANENT\A - Florida Product Approvals\FL-14512\C - Drawings\FL 14512 (2017)\FL-14512.4.dwg, 5.1

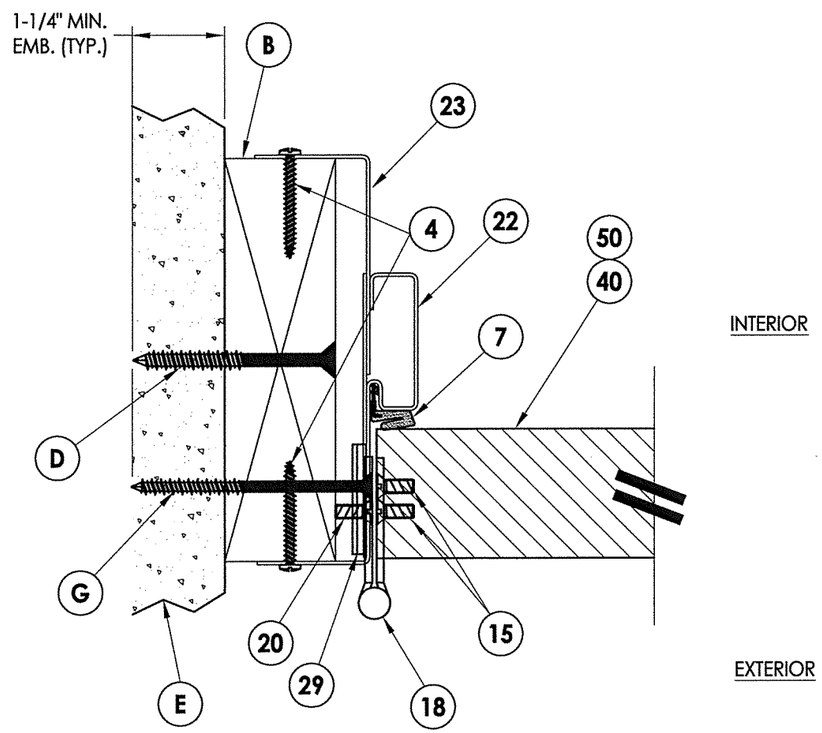

1/6 HORIZONTAL CROSS SECTION
2x Buck Construction

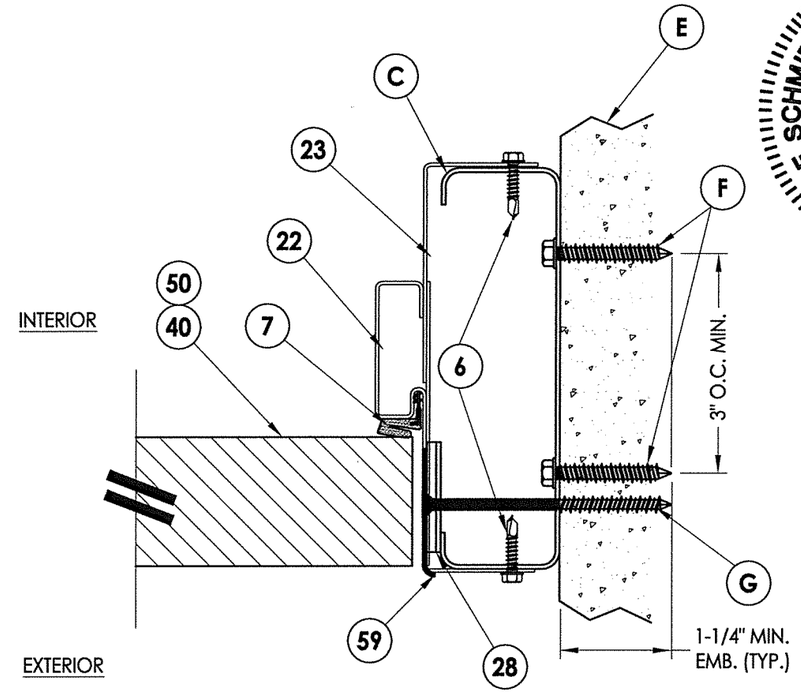

2/6 HORIZONTAL CROSS SECTION
Metal Stud Construction

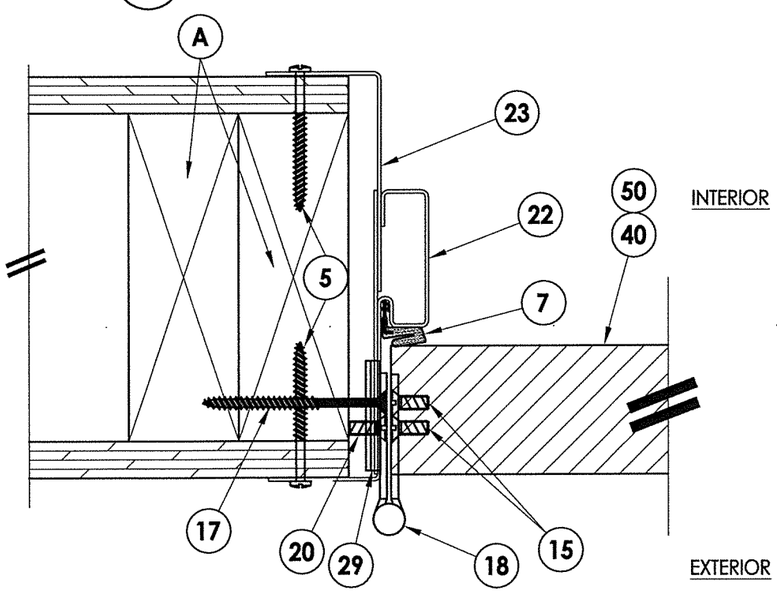

4/6 HORIZONTAL CROSS SECTION
2x Stud Construction

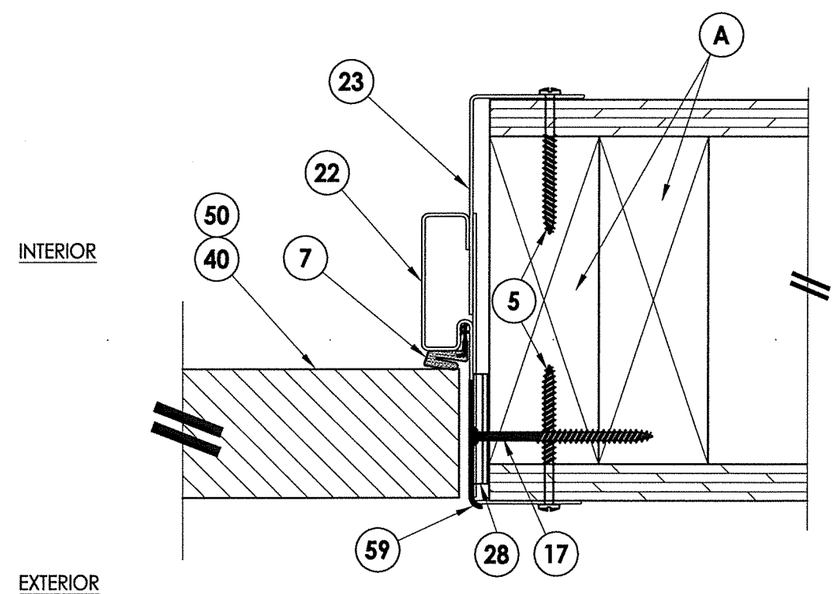

3/6 HORIZONTAL CROSS SECTION
2x Stud Construction

L. F. SCHMIDT
LICENSE
No. 43409
STATE OF FLORIDA
PROFESSIONAL ENGINEER

4-17-18

Documents Prepared By:
Lyndon F. Schmidt
P.E. No. 43409

RW BUILDING CONSULTANTS, INC.
P.O. Box 230, Valrico, FL 33595
Phone No.: 813.659.9197
FBPE C.A. No. 9813

PRODUCT: IDP STEEL FRAME (K2A-SERIES)

PART OR ASSEMBLY: HORIZONTAL CROSS SECTIONS

REVISIONS

NO.	DATE		BY
2	4/17/18	CLARIFY FRAME ANCHORING	LFS
1	9/26/17	UPDATE TO 6TH ED. (2017) FBC	JK

DATE: 10/23/15
SCALE: N.T.S.
DWG. BY: JK
CHK. BY: LFS
DRAWING NO.: FL-14512.4
SHEET 6 OF 10

© 2015 R.W. BUILDING CONSULTANTS INC.

R:\Clients\IDP PERMANENT\A - Florida Product Approvals\FL-14512\C - Drawings\FL 14512 (2017)\FL-14512.4.dwg, 6.1

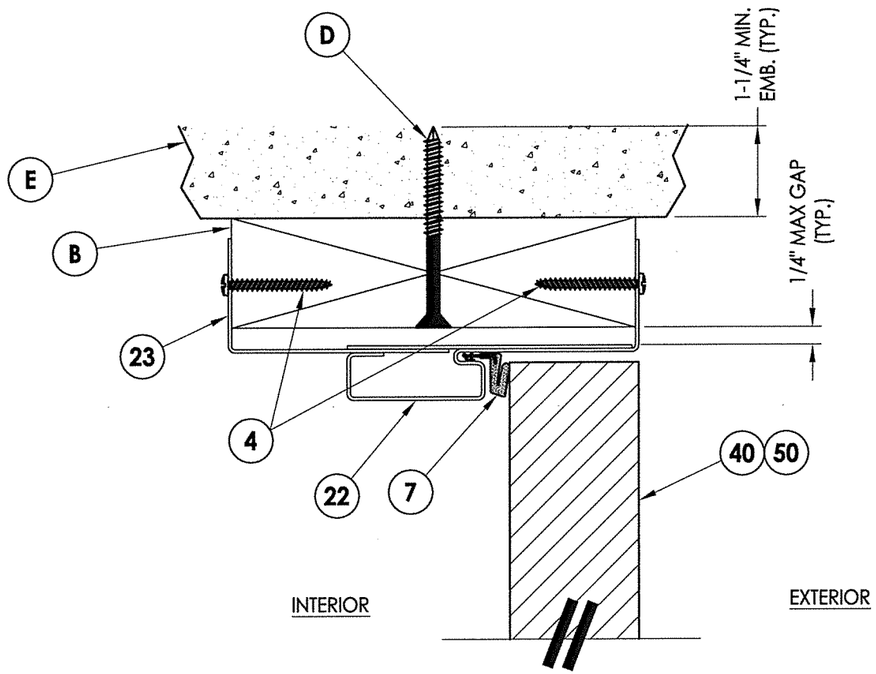

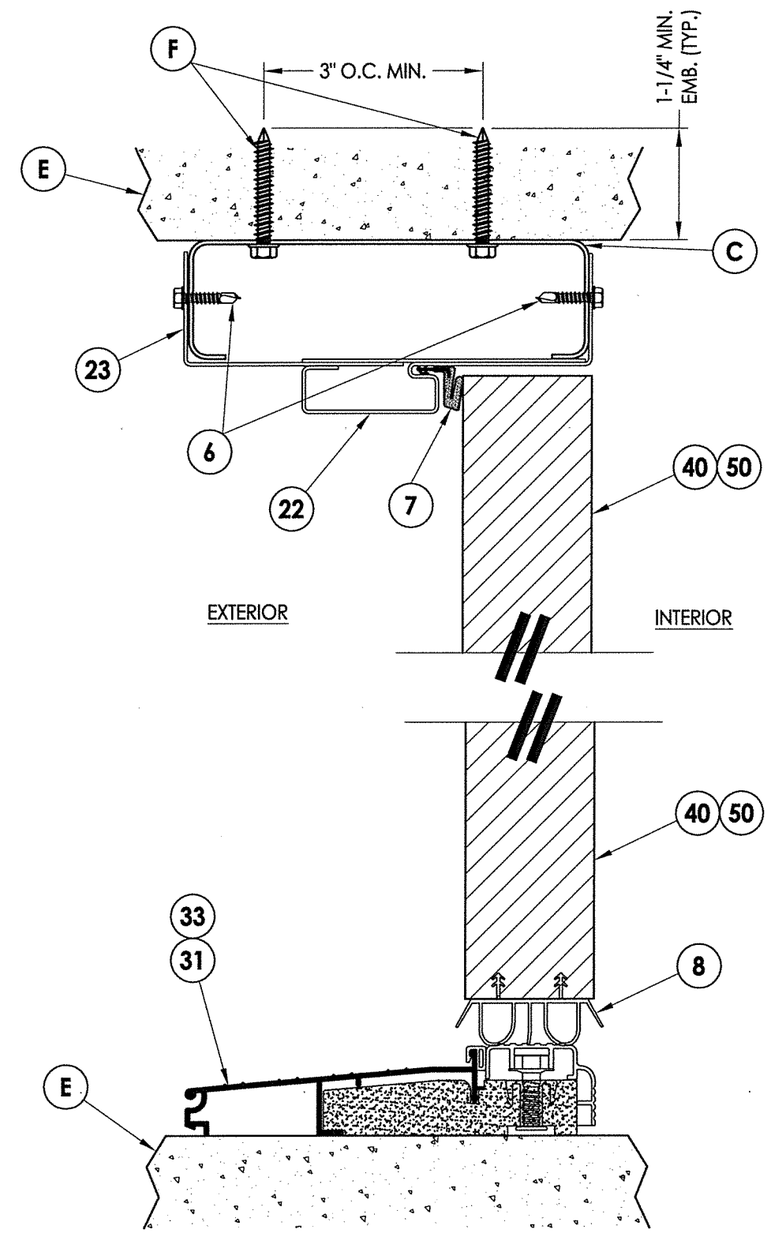

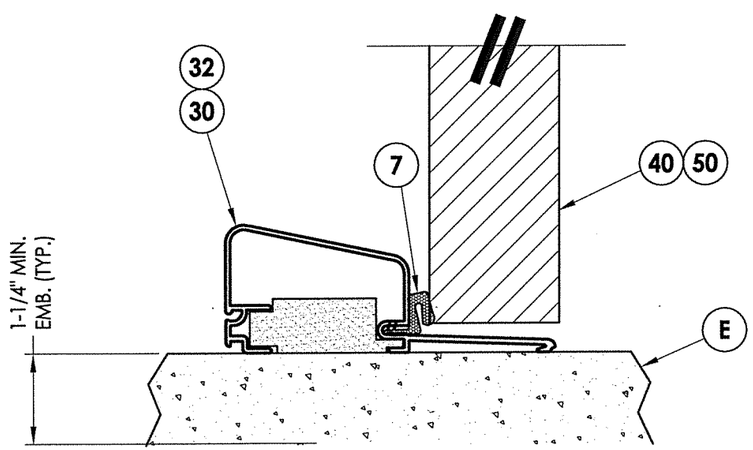

1/7 **VERTICAL CROSS SECTION**
Outswing

2/7 **VERTICAL CROSS SECTION**
Inswing

L. F. SCHMIDT
LICENSE
No. 43409
STATE OF FLORIDA
PROFESSIONAL ENGINEER

Documents Prepared By:
Lyndon F. Schmidt
P.E. No. 43409

R.W. BUILDING CONSULTANTS, INC.
P.O. Box 230, Valrico, FL 33595
Phone No.: 813.659.9197
FBPE C.A. No. 9813

PRODUCT: IDP STEEL FRAME (K2A-SERIES)

PART OR ASSEMBLY: VERTICAL CROSS SECTIONS

NO.	DATE	REVISIONS	BY
2	4/17/18	CLARIFY FRAME ANCHORING	LFS
1	9/26/17	UPDATE TO 6TH ED. (2017) FBC	JK

DATE: 10/23/15
SCALE: N.T.S.
DWG. BY: JK
CHK. BY: LFS
DRAWING NO.: FL-14512.4
SHEET 7 OF 10

© 2015 R.W. BUILDING CONSULTANTS INC.

R:\Clients\IDP PERMANENT\A - Florida Product Approvals\FL-14512\C - Drawings\FL 14512 (2017)\FL-14512.4.dwg, 7.1

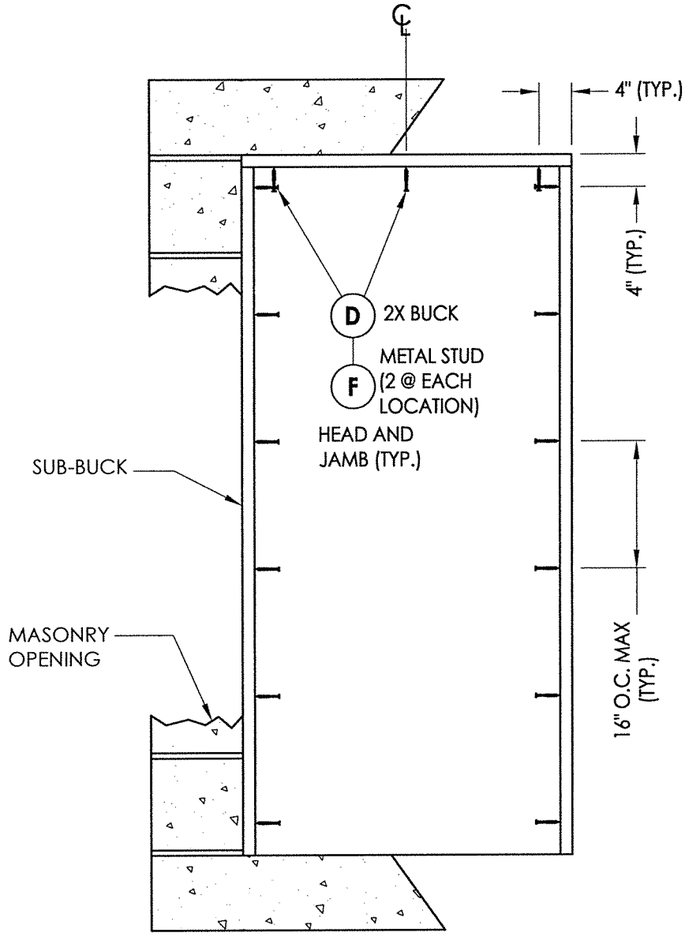

BUCK ANCHORING
7' Door

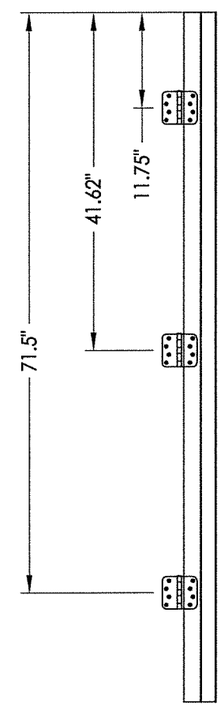

HINGE JAMB

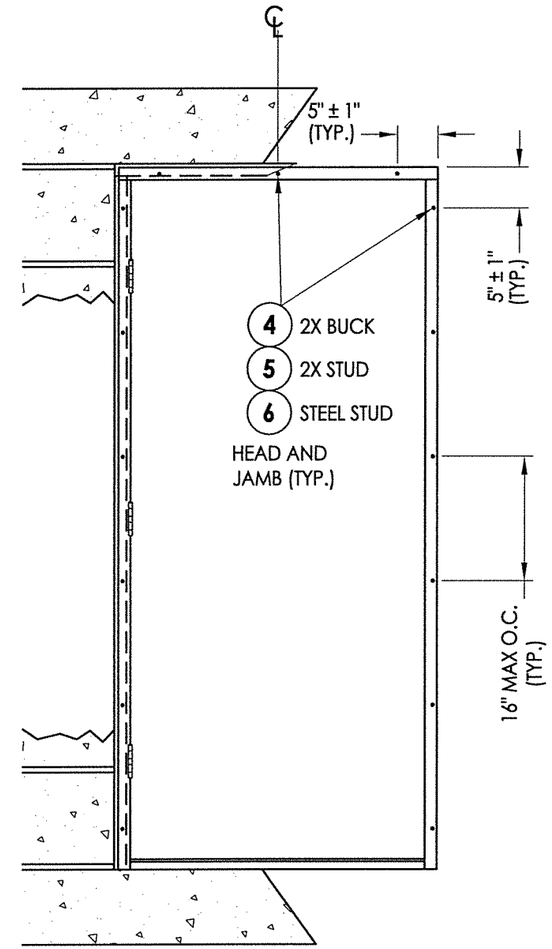

FRAME ANCHORING
7' Door

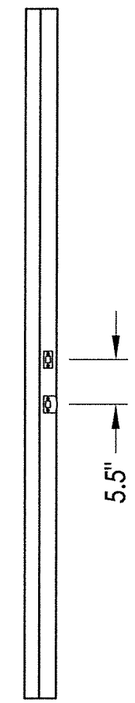

STRIKE JAMB

CONCRETE ANCHOR NOTES:

1. *Concrete anchor locations at the corners may be adjusted to maintain the min. edge distance to mortar joints.*
2. *Concrete anchor locations noted as "MAX. ON CENTER" must be adjusted to maintain the min. edge distance to mortar joints, additional concrete anchors may be required to ensure the "MAX. ON CENTER" dimension are not exceeded.*
3. *Concrete anchor table:*

ANCHOR TYPE	ANCHOR SIZE	MIN. EMBEDMENT	MIN. CLEARANCE TO MASONRY EDGE	MIN. CLEARANCE TO ADJACENT ANCHOR
ITW TAPCON®	1/4"	1-1/4"	2"	4"
ELCO ULTRACON®	1/4"	1-1/4"	1"	4"
ITW TAPCON®	3/16"	1-1/4"	3"	1-1/2"

WOOD SCREW INSTALLATION NOTES:

1. *Maintain a minimum 5/8" edge distance, 1" end distance, & 1" o.c. spacing of wood screws to prevent the splitting of wood.*

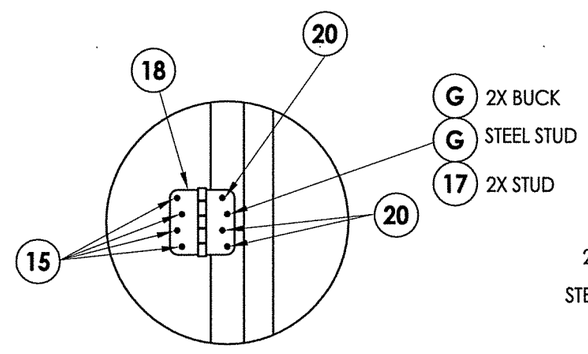

HINGE DETAIL

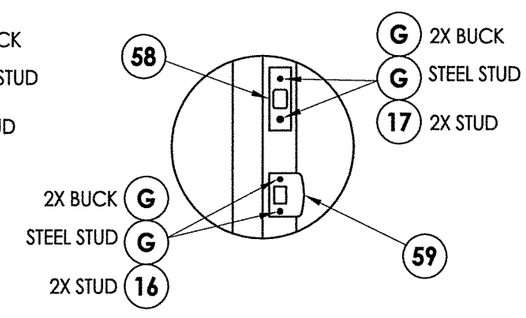

STRIKE PLATE DETAIL

L. F. SCHMIDT LICENSE No. 43409 STATE OF FLORIDA PROFESSIONAL ENGINEER

Documents Prepared By:
Lyndon F. Schmidt
P.E. No. 43409

RW BUILDING CONSULTANTS, INC.
P.O. Box 230, Valrico, FL 33595
Phone No.: 813.659.9197
FBPE C.A. No. 9813

PRODUCT: IDP STEEL FRAME (K2A-SERIES)

PART OR ASSEMBLY: FRAME AND BUCK ANCHORING (7'-0" DOOR)

REVISIONS

NO.	DATE	BY
2	4/17/18	LFS
1	9/26/17	JK

CLARIFY FRAME ANCHORING
UPDATE TO 6TH ED. (2017) FBC

DATE: 10/23/15
SCALE: N.T.S.
DWG. BY: JK
CHK. BY: LFS
DRAWING NO.: FL-14512.4
SHEET 8 OF 10

© 2015 R.W. BUILDING CONSULTANTS INC.

R:\Clients\IDP PERMANENT\A - Florida Product Approvals\FL-14512\C - Drawings\FL 14512 (2017)\FL-14512.4.dwg, 8.1

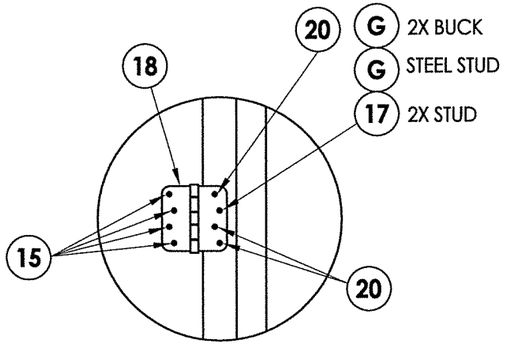

HINGE DETAIL

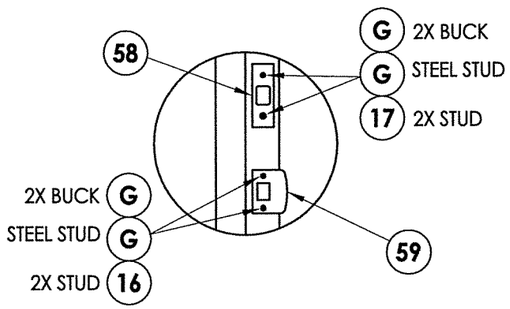

STRIKE PLATE DETAIL

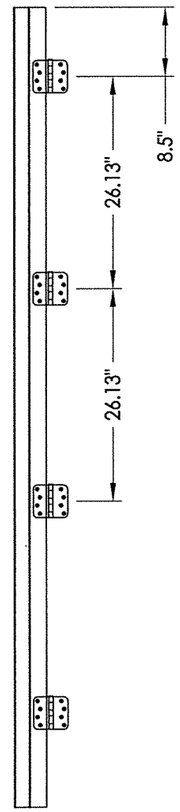

HINGE JAMB

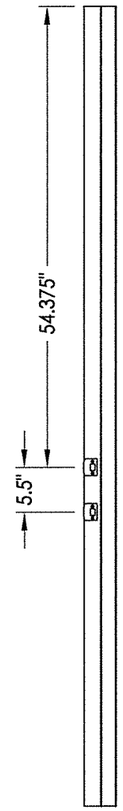

STRIKE JAMB

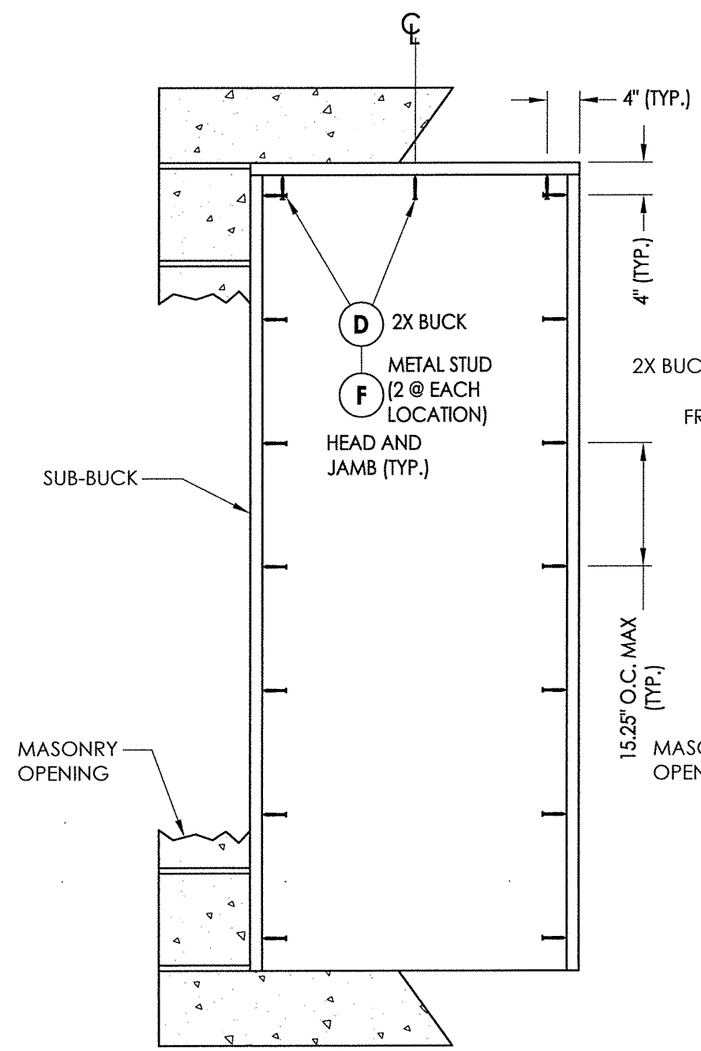

BUCK ANCHORING
8' Door

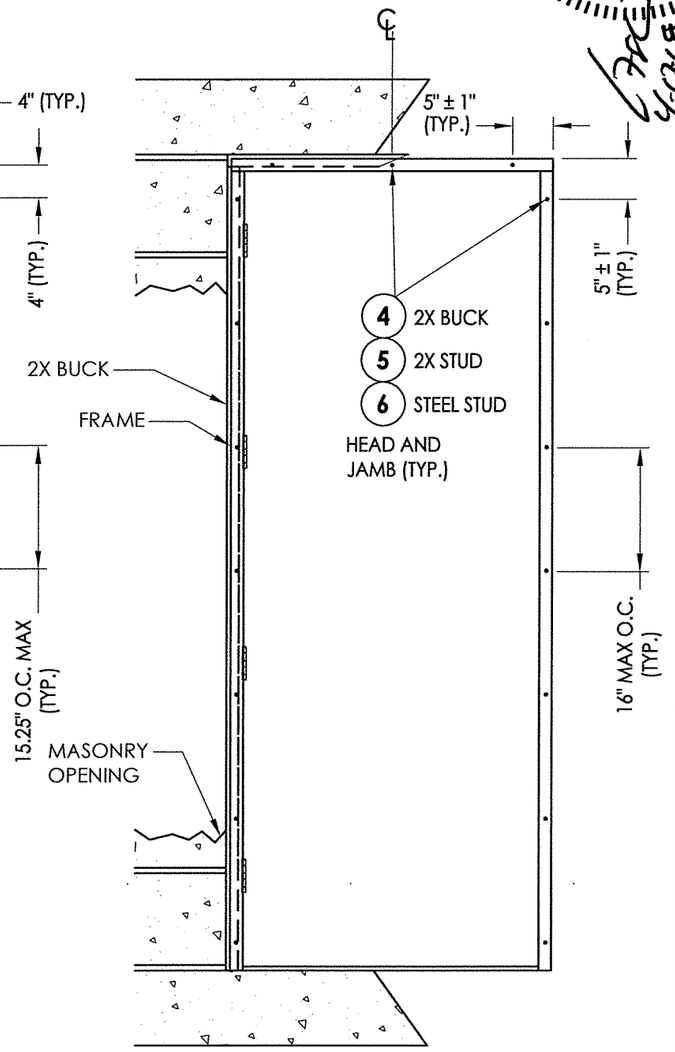

FRAME ANCHORING
8' Door

CONCRETE ANCHOR NOTES:

1. *Concrete anchor locations at the corners may be adjusted to maintain the min. edge distance to mortar joints.*
2. *Concrete anchor locations noted as "MAX. ON CENTER" must be adjusted to maintain the min. edge distance to mortar joints, additional concrete anchors may be required to ensure the "MAX. ON CENTER" dimension are not exceeded.*
3. *Concrete anchor table:*

ANCHOR TYPE	ANCHOR SIZE	MIN. EMBEDMENT	MIN. CLEARANCE TO MASONRY EDGE	MIN. CLEARANCE TO ADJACENT ANCHOR
ITW TAPCON®	1/4"	1-1/4"	2"	4"
ELCO ULTRACON®	1/4"	1-1/4"	1"	4"
ITW TAPCON®	3/16"	1-1/4"	3"	1-1/2"

WOOD SCREW INSTALLATION NOTES:

1. *Maintain a minimum 5/8" edge distance, 1" end distance, & 1" o.c. spacing of wood screws to prevent the splitting of wood.*

STATE OF FLORIDA
L. F. SCHMIDT
LICENSE No. 43409
PROFESSIONAL ENGINEER

Documents Prepared By:
Lyndon F. Schmidt
P.E. No. 43409

BUILDING CONSULTANTS, INC.
P.O. Box 230, Valrico, FL 33595
Phone No.: 813.659.9197
FBPE C.A. No. 9813

PRODUCT: IDP STEEL FRAME (K2A-SERIES)

PART OR ASSEMBLY: FRAME AND BUCK ANCHORING (8'-0" DOOR)

REVISIONS

NO.	DATE		BY
2	4/17/18	CLARIFY FRAME ANCHORING	LFS
1	9/26/17	UPDATE TO 6TH ED. (2017) FBC	JK

DATE: 10/23/15
SCALE: N.T.S.
DWG. BY: JK
CHK. BY: LFS
DRAWING NO.: FL-14512.4
SHEET 9 OF 10

© 2015 R.W. BUILDING CONSULTANTS INC.

R:\Clients\IDP PERMANENT\A - Florida Product Approvals\FL-14512\C - Drawings\FL 14512 (2017)\FL-14512.4.dwg, 9.1

BILL OF MATERIALS

ITEM #	DESCRIPTION	MATERIAL
A	2X STUD FRAMING (SG>= 0.55)	WOOD
B	2X BUCK (SG >= 0.55)	WOOD
C	METAL STUD (SSMA STUD 550S162-54, Fy = 33 ksi, Fu = 45 ksi)	STEEL
D	1/4" X 2-3/4" ELCO OR ITW PFH CONCRETE SCREW	STEEL
E	MASONRY - 3,000 PSI MIN. CONCRETE CONFORMING TO ACI 301 OR HOLLOW BLOCK CONFORMING TO ASTM C90 OR ASTM A653 STEEL	CONCRETE
F	3/16" X 1-3/4" HWH ITW CONCRETE SCREW	STEEL
G	3/16" X 3-1/4" ELCO OR ITW PFH CONCRETE SCREW	STEEL
H	1/4" X 2-1/4" ELCO OR ITW PFH CONCRETE SCREW	STEEL
4	#10 X 1-1/2" PPH SMS (1-1/4" MIN. EMBEDMENT)	STEEL
5	#10 X 2" PPH SMS (1-1/4" MIN. EMBEDMENT)	STEEL
6	#10 X 3/4" HWH SELF-DRILLING TEK SCREW (3 THREADS MUST PROTRUDE THRU STEEL)	STEEL
7	COMPRESSION WEATHERSTRIPPING QLON QDS 650 BY SCHLEGEL	-
8	SWEEP	PVC
15	10-24 X 5/8" PFH MS	STEEL
16	#8 X 2-1/2" PFH WS	STEEL
17	#10 X 2-1/2" PFH WS	STEEL
18	4.0" X 4.0" HINGE	STEEL
19	8-32 X 3/8" PFH MS	STEEL
20	10-24 X 1/2" PFH MS	STEEL
22	IDP (K2A-SERIES) EXTERIOR FRAME (18 GA. - A60 GALVANNEALED STEEL)	STEEL
23	IDP (K2A-SERIES) INTERIOR FRAME (22 GA. - A60 GALVANNEALED STEEL)	STEEL
28	HINGE LATCH AND DEADBOLT REINFORCEMENT	STEEL
29	HINGE REINFORCEMENT	STEEL
30	OUTSWING THRESHOLD	ALUM/WOOD
31	INSWING THRESHOLD	ALUM/COMP
32	OUTSWING THRESHOLD	ALUM/COMP
33	ADA THRESHOLD	ALUM
40	8' DOOR - SEE DOOR PANEL DETAILS	-
50	7' DOOR - SEE DOOR PANEL DETAILS	-
58	STRIKE PLATE - DEADBOLT	STEEL
59	" T " STRIKE PLATE - LATCH	STEEL

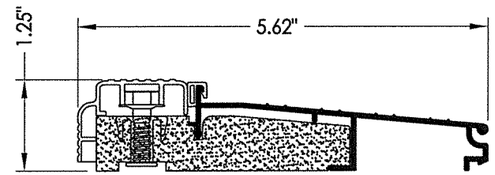

31 INSWING THRESHOLD
AFCO

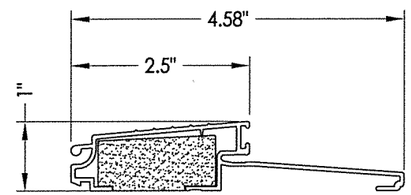

32 OUTSWING THRESHOLD
AFCO

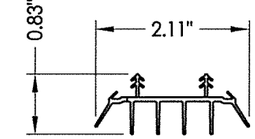

8 SWEEP

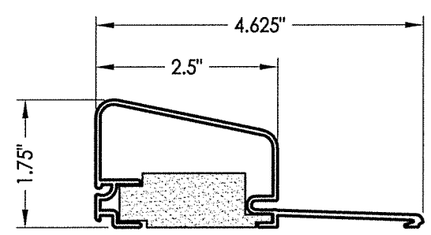

30 OUTSWING THRESHOLD
AFCO

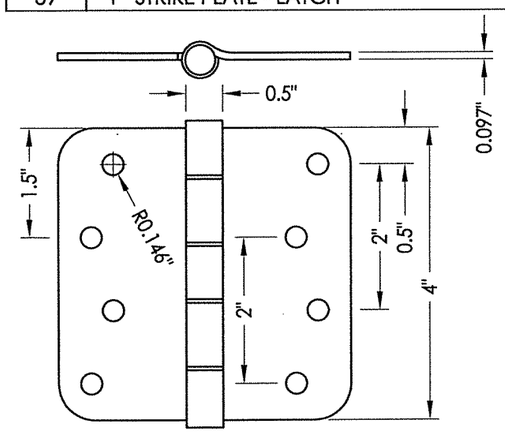

18 HINGE

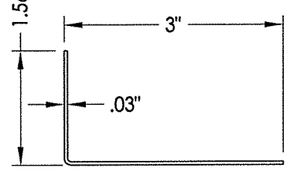

23 INTERIOR FRAME

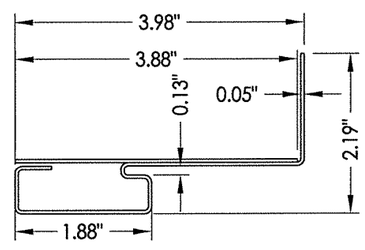

22 EXTERIOR FRAME

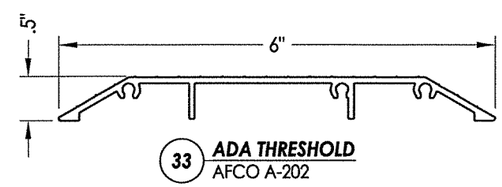

33 ADA THRESHOLD
AFCO A-202

L. F. SCHMIDT
LICENSE
No. 43409
STATE OF FLORIDA
PROFESSIONAL ENGINEER

4.12.18

Documents Prepared By:
Lyndon F. Schmidt
P.E. No. 43409

RW BUILDING CONSULTANTS, INC.
P.O. Box 230, Valrico, FL 33595
Phone No.: 813.659.9197
FBPE C.A. No. 9813

PRODUCT: IDP STEEL FRAME (K2A-SERIES)

PART OR ASSEMBLY: BILL OF MATERIALS AND COMPONENTS

REVISIONS

NO.	DATE		BY
2	4/17/18	CLARIFY FRAME ANCHORING	LFS
1	9/26/17	UPDATE TO 6TH ED. (2017) FBC	JK

DATE: 10/23/15
SCALE: N.T.S.
DWG. BY: JK
CHK. BY: LFS
DRAWING NO.: FL-14512.4
SHEET 10 OF 10

© 2015 R.W. BUILDING CONSULTANTS INC.

R:\Clients\IDP PERMANENT\A - Florida Product Approvals\FL-14512\C - Drawings\FL 14512 (2017)\FL-14512.4.dwg, 10.1